Figure 3. Notcher shipping and working configuration.

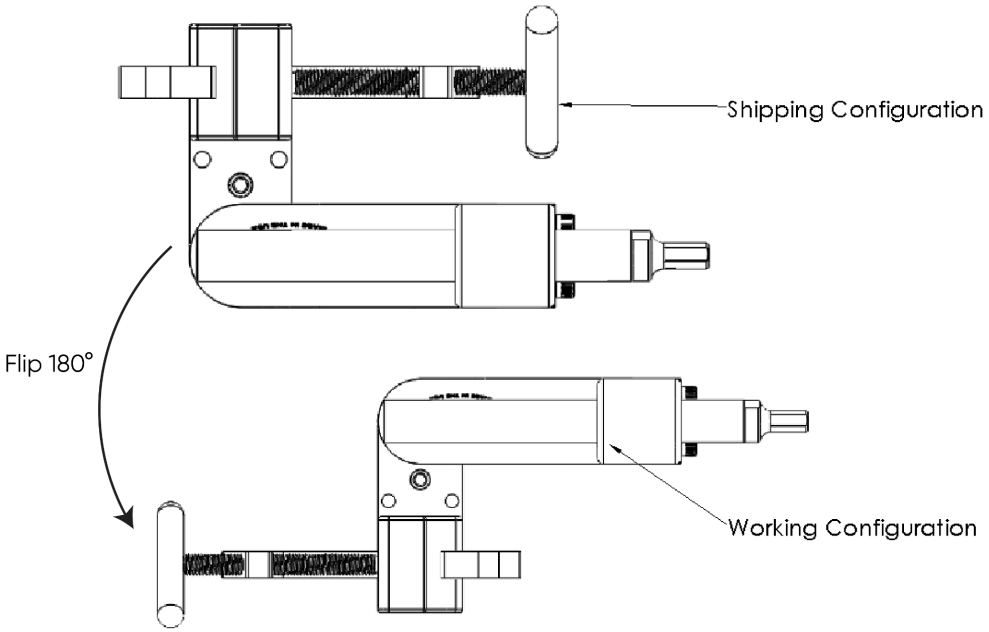

Note: For notching larger tubes (2.25" OD and larger) we recommend switching back to "shipping configuration" in order to provide enough clearance

JMR Manufacturing
web: www.jmrmfg.com
phone: 805-239-5972
email: info@jmrmfg.com

RACELINE TUBE NOTCHER
TN300

WARNING

1. Always pay close attention to what you are doing. Turn off cell phones, tablets, and any other distractions when using this tube notcher.
2. This machine is meant to be operated by competent individuals who have a thorough understanding of tube notchers and machines in general.
3. Always wear eye protection while operating the tube notcher.
4. Never put your hands or other body parts into the tube notcher apparatus.
5. Never wear loose clothing while operating the tube notcher.
6. Always work in a clean, safe, well lit, level work area.
7. Never use a damaged hole saw, or a hole saw that is not intended for cutting steel tubing.
8. Never use a damaged, worn, or low quality drill chuck
9. Never operate the tube notcher with broken, worn or damaged parts.
10. DO NOT attempt to repair and reuse any damaged tube notcher parts.
11. User assumes all risks when using this product.
12. Always properly clamp the material to be notched in the tube notcher. DO NOT use shims/spacers on the material. This is dangerous, and it will affect the accuracy of the notch and stability of the material in the vise.

WARRANTY

1. One year limited warranty on tube notcher.
2. Warranty items must be sent to JMR Manufacturing postage prepaid for inspection. JMR Manufacturing will replace or repair items at their discretion.
3. JMR Manufacturing makes every attempt to satisfy customers as quickly as possible.
4. JMR Manufacturing will not accept any responsibility for personal injury or property damage arising from the failure/misuse of any parts manufactured and/or sold by JMR Manufacturing.

MOUNTING THE NOTCHER

1. Remove the four 5/16" Allen bolts that attach the V-Block to the V-Block Arm (Figure 1)
2. Mount the TN300 to the Tube Notcher Mount Block (NMT100) using the provided 5/16-18 bolts
3. Re-attach the V-Block and C-Clamp to the TN300
4. The Tube Notcher Mount can be clamped in a vise or welded to a stand. (remove from notcher before welding).
5. The JMR Universal Stand Base and other mounting options are also available separately through JMR Manufacturing.

Note: The TN300 can also be mounted directly to a work bench by using 3/8-16 bolts; however, access to the V-Block positioning bolts will be limited.

OPERATION OF THE TUBE NOTCHER

1. To position the TN300 to the proper notch angle:
   a. Slightly loosen the large nut on the bottom of the tube notcher.
   b. Rotate the Bearing Arm to the desired position using the protractor at the base of the arms. (Figure 1).
   c. Once the desired angle is reached, tighten the nut on the bottom of the tube notcher.
2. Mount a hole saw to the end of the notcher shaft. The tube notcher is supplied with two adapters:
   a. 1/2-20 adapter for hole saws using a 1/2-20 female mounting thread
   b. 5/8-18 adapter for hole saws using a 5/8-18 female mounting thread
   c. Make sure that no more than two threads are showing on the inside of the hole saw. (Figure 2)
3. Place tubing in the V-Block and position as required, then tighten the C-Clamp to securely hold the material.
4. Mount a 1/2" drive drill motor on the cutter shaft.
5. Follow the hole saw manufacturer's recommendation on the use of cutting/cooling fluids.
6. **Note**: Notch by pushing towards the V-Block in order to ensure the best performance of the hole saw and the tube notcher. (Figure 3)

OFFSET NOTCHING

1. Loosen the two bolts clamping the bearing housing to the bearing arm (Figure 1)
2. Adjust height of bearing housing to achieve the desired amount of offset. A spacer can be used if necessary
3. Tighten the two bolts clamping the bearing housing to the bearing arm

Figure 1. Notcher overall view.

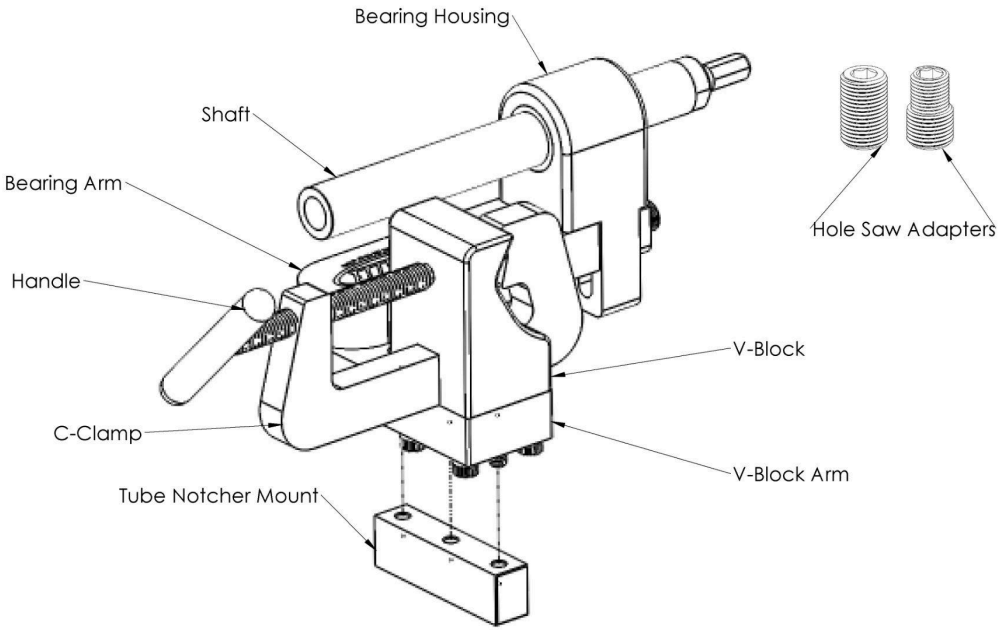

Figure 2. Hole saw mounting.

